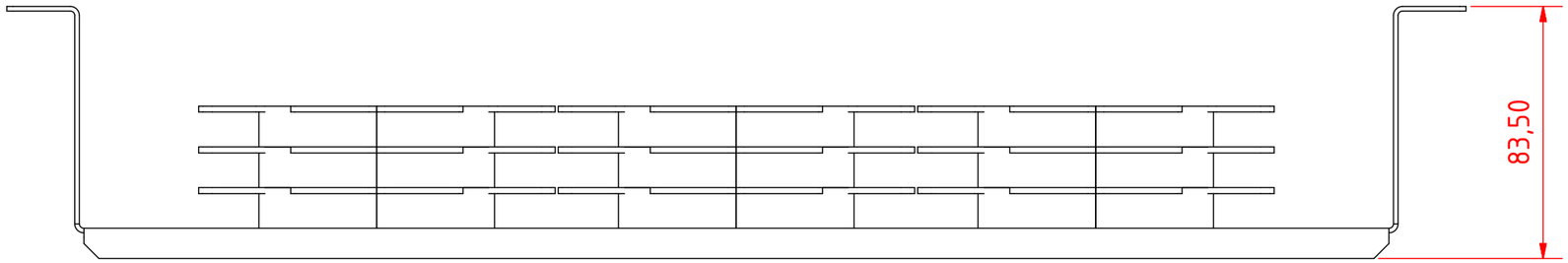

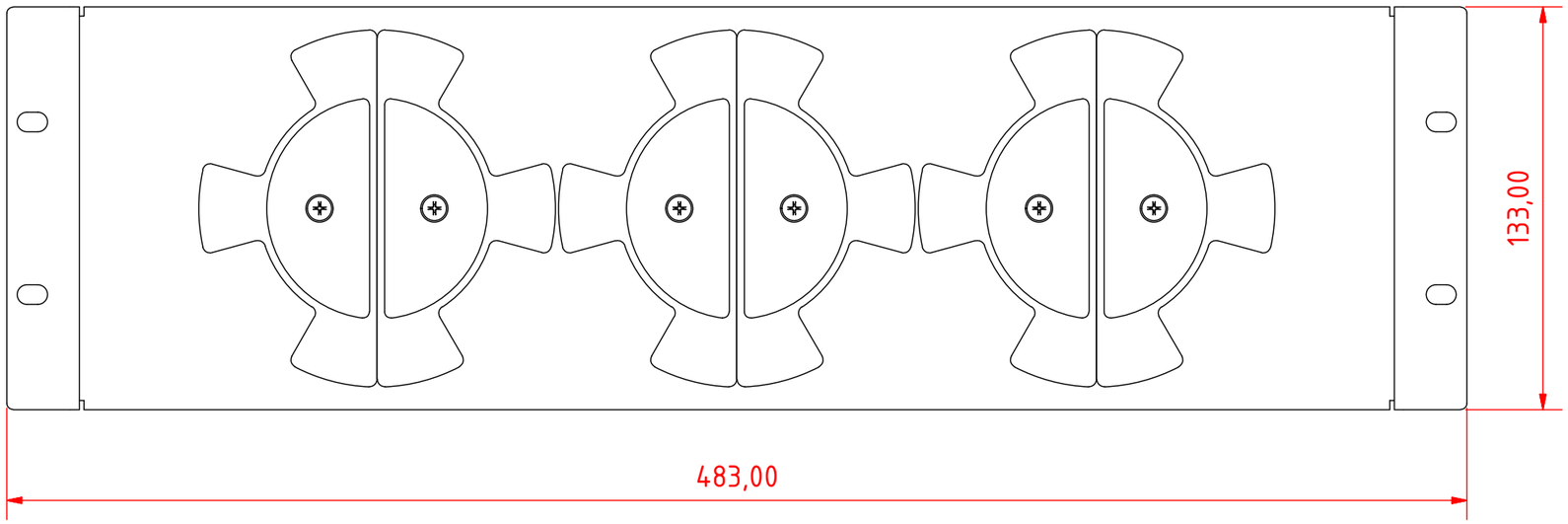

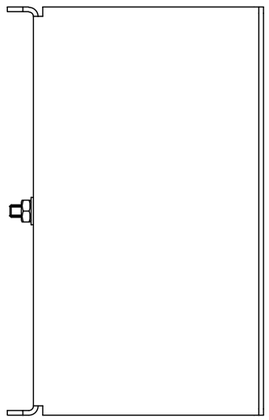

					Date	Name
				Drawn	2012.02.20.	Martins
				Checked		
				Standard		
State	Changes	Date	Name			

CMP-11

1

A3